DRAWING NO. SD82469

REV.	DATE	DESCRIPTION	BY	C'K'D.
9	7/31/92	REDRAWN TO CAD PER D.O. 52314	JEL	DGF
10	9-21-93	ADDED METRIC DIMENSIONS PER PCN 1436	RER	KW
11	5/2/96	CHANGED P-UADP TO PUADP-1. CHANGED NOTE 8 TO CURRENT. CHANGED .81 C DIM TO .83. ADDED TM PER (PCN 2816).	RDP	JLM
12	1/17/97	ADDED CATALOG NO.'S YGA8C-2N AND YGA6C-2N, REVISED TABLE DATA AND ADDED TEXT NOTES 9-13 (PER PCN 2887)	PL	JLM
13	9/4/97	CHANGED DIMS. B, C, & T REF FOR CAT. NO. YGA8C-2N, & B MIN. FOR CAT. NO. YGA6C-2N, PER PCN (3324).	KRB	JW

CATALOG NUMBER	COPPER CONDUCTOR			DIMENSIONS				
	SIZE	METRIC SIZE	STR.	B MIN.	C	L	O.D.	T REF
YGA8C-2N ◁13	#8 STR (.146 DIA)	[10mm² (.165mm DIA)]	7	.78 [20]	.83 [21]	4.09 [104]	.27 [7]	.12 [3]
YGA6C-2N ◁13	#6 STR (.184 DIA)	-----	7	1.09 [28]	.83 [21]	4.40 [112]	.29 [7]	.12 [3]
YGA2C-2N	#2 (.292 DIA)	-----	7	1.22 [31]	.83 [21]	4.64 [118]	.42 [11]	.12 [3]
YGA25-2N	1/0 (.372 DIA)	-----	7,19	1.35 [34]	.83 [21]	4.81 [122]	.51 [13]	.12 [3]
YGA26-2N	2/0 (.420 DIA)	[70mm² (10.9mm DIA)]	7,19,37	1.45 [37]	.83 [21]	4.97 [126]	.56 [14]	.12 [3]
YGA28-2N	4/0 (.528 DIA)	-----	7,12,19	1.57 [40]	1.00 [25]	5.17 [131]	.69 [18]	.14 [4]
YGA29-2N	250 kcmil (.575 DIA)	[120mm² (14.4mm DIA)]	7,19,37	1.57 [40]	1.09 [28]	5.21 [132]	.75 [19]	.16 [4]
YGA34-2N	500 kcmil (.813 DIA)	[240mm² (20.4mm DIA)]	19,37	2.20 [56]	1.52 [39]	6.08 [154]	1.06 [27]	.23 [6]

CATALOG NO.	TOLERANCE C	TOLERANCE L
YGA8C-2N THRU YGA2C-2N	±.03 [±1]	±.09 [±2]
YGA25-2N THRU YGA34-2N	±.08 [±2]	±.12 [±3]

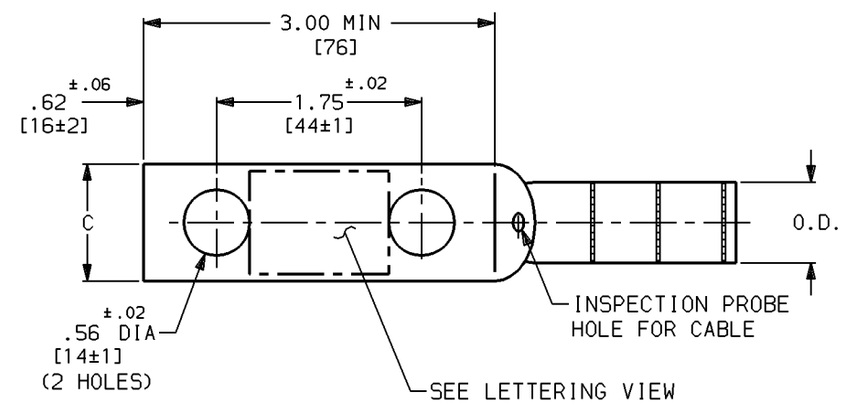

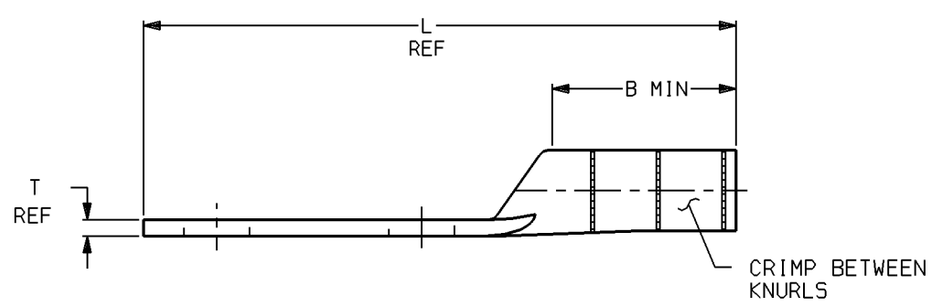

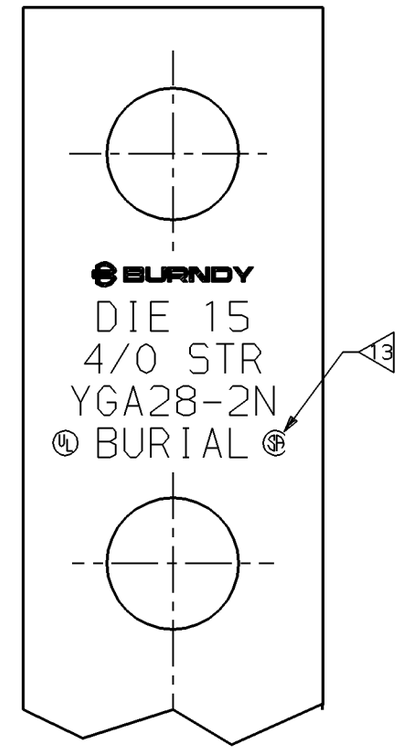

TYPICAL LETTERING

NOTES:

1. MATERIAL: COPPER
2. BARREL IS PREFILLED WITH PENETROX™ "E" AND INDIVIDUALLY SEALED.
3. ▷ WHERE A "U" OR "PU" IS RECOMMENDED WITH THE Y45 HYPRESS™, A PT6515 ADAPTER MUST BE USED.
4. ▷ WHERE A "U" OR "PU" IS RECOMMENDED WITH THE Y46 HYPRESS™, A PUADP-1 ADAPTER MUST BE USED.
5. UL 467 LISTED.
6. REMOVED PER PCN 2887.
7. SUITABLE FOR DIRECT BURIAL IN EARTH OR CONCRETE.
8. DIMENSIONS IN BRACKETS [ ] ARE IN MILLIMETERS, ROUNDED OFF TO THE NEAREST MILLIMETER, UNLESS OTHERWISE NOTED. METRIC DIMENSIONS ARE FOR REFERENCE ONLY.
9. ▷ Y35P3 INDENTOR ADAPTOR REQUIRED FOR Y34PR INDENTOR.
10. ▷ PERMANENT DIE IN TOOLING.
11. ▷ FOR USE BY CUSTOMERS THAT HAVE THIS HYPRESS™, NO NEW Y34PA HYPRESS™ TOOLS ARE BEING PROCESSED. Y34PA USES A--D NEST DIES ONLY.
12. "X", "W-RT", "U", & "L" DIE SETS ARE COLOR CODED. "A", "B", AND "C" DIES ARE NOT COLOR CODED.
13. ▷ YGA8C-2N & YGA6C-2N ARE NOT CSA CERTIFIED. ALL OTHERS ARE CSA CERTIFIED.

SEE SHEET #2 FOR INSTALLATION TOOLING.

HYLUG™, COPPER GROUND		
CAT NO: YGA-2N (SEE TABLE)		SCALE N/A
DRAWN: C. PACANO 10/31/78	CHECKED: CAR 10/31/78	
DSGN APPVL: ESR 11/1/78	MFG APPVL: ------	
Q.A. APPVL: A. LLOYD 8/18/92	MKTG APPVL: T. NELSON 9/10/92	
CAD FILE: SD82469-SHT01	PM REF: N/A	
FRAMATOME CONNECTORS USA INC. BURNDY ELECTRICAL	MDL REF: N/A	
	PROJECT: D.O. 38472	
MANCHESTER, NH 03108 U. S. A. 1-800-346-4175	DRAWING NO. SD82469	REV 13
	SHEET 1 OF 2	

REV: 061995

DRAWING NO. SD82469

INSTALLATION TOOLING (# CRIMPS)

CATALOG NO.	COLOR CODE	DIE INFORMATION: DIE INDEX	DIE INFORMATION: TYPE	MECHANICAL RATCHET: 10 Y2MR	MECHANICAL RATCHET: 0UR840	MECHANICAL RATCHET: MD6 MD7	MECHANICAL RATCHET: MD6--R2 BAT500	MECHANICAL RATCHET: MD7-34R	HYDRAULIC: 11 9 Y34A Y34B Y34BH	HYDRAULIC: 9 Y35, Y39 Y750, BAT35 BAT750	HYDRAULIC: 9 4 Y46	HYDRAULIC: 9 3 Y45	HYDRAULIC: Y48B	HYDRAULIC: Y60BHU	DIELESS (# CRIMPS)	WIRE STRIP LENGTH
YGA8C-2N	RED	49	RED DIE SET	RED (2)	X8CRT (2)	W8CVT (2) W8CRT (2)	W8CVT (2) W8CRT (2)	W8CVT (2) W8CRT (2)	-----	U8CRT (2)	U8CRT (2)	U8CRT (2)	-----	-----	RATCHET: Y8MRB-1 (2) MECHANICAL: MY29-3 (2) MY29-11 (2)	7/8"
			NEST	-----	-----	-----	-----	-----	-----	-----	-----	-----	-----	-----		
			INDENTOR													
YGA6C-2N	BLUE	7	BLUE DIE SET	BLUE (2)	X5CRT (2)	W5CRT (2) W5CVT (2)	W5CRT (2) W5CVT (2)	W5CRT (2) W5CVT (2)	-----	U5CRT (2) U8CABT (2)	U5CRT (2) U8CABT (2)	U5CRT (2) U8CABT (2)	-----	-----	MECHANICAL: MY29-3 (2) MY29-11 (2) HYDRAULIC: Y644M (1) BAT644M (1)	1-3/16"
		374	NEST	-----	-----	-----	-----	-----	B6CD(1) A6CD(1)	U6CD-1 (1)	U6CD-1 (1)	U6CD-1 (1)				
			INDENTOR						Y34PR	Y34PR	Y34PR	Y34PR				
YGA2C-2N	BROWN	10	BROWN DIE SET	BROWN (4)	X2CRT (2)	W2CRT (2) W2CVT (2)	W2CRT (2) W2CVT (2)	W2CRT (2) W2CVT (2)	-----	U2CRT (2)	U2CRT (2)	U2CRT (2)	-----	-----		1-5/16"
			NEST	-----	-----	-----	-----	-----	B2CD(1) A2CD(1)	U2CD-1 (1)	U2CD-1 (1)	U2CD-1 (1)	-----	-----		
			INDENTOR						Y34PR	Y34PR	Y34PR	Y34PR				
YGA25-2N	PINK	12	PINK DIE SET	-----	X25RT (4)	W25RT (4) W25VT (4)	W25RT (4) W25VT (4)	W25RT (4) W25VT (4)	A25R (2)	U25RT (2) U2CABT (2)	U25RT (2) U2CABT (2)	U25RT (2) U2CABT (2)	-----	-----		1-7/16"
		348	NEST	-----	-----	-----	-----	-----	B25D(1) A25D(1)	U25D-1 (1)	U25D-1 (1)	U25D-1 (1)	-----	-----		
			INDENTOR						Y34PR	Y34PR	Y34PR	Y34PR				
YGA26-2N	BLACK	13	BLACK DIE SET	-----	X26RT (4)	W26RT (4) W26VT (4)	W26RT (4) W26VT (4)	W26RT (4) W26VT (4)	-----	U26RT (2)	U26RT (2)	U26RT (2)	-----	-----		1-9/16"
			NEST	-----	-----	-----	-----	-----	B26D(1) A26D(1)	U26D-1 (1)	U26D-1 (1)	U26D-1 (1)	-----	-----		
			INDENTOR						Y34PR	Y34PR	Y34PR	Y34PR				
YGA28-2N	PURPLE	15	PURPLE DIE SET	-----	X28RT (6)	W28RT (4) W28VT (4)	W28RT (4) W28VT (4)	W28RT (4) W28VT (4)	-----	U28RT (2)	U28RT (2)	U28RT (2)	C28R (2)	L28RT (1)		1-11/16"
			NEST	-----	-----	-----	-----	-----	B28D(1) A28D(1)	U28D-1 (1)	U28D-1 (1)	U28D-1 (1)	C28D (1)	-----		
			INDENTOR						Y34PR	Y34PR	Y34PR	Y34PR	Y48PR			
YGA29-2N	YELLOW	16	YELLOW DIE SET	-----	X29RT (8)	W29VT (4)	W29RT (4) W29VT (4)	W29VT (4)	A29R (2)	U29RT (2)	U29RT (2)	U29RT (2)	C29R (2)	L29RT (1)	MECHANICAL: MY29-3 (2) MY29-11 (2) HYDRAULIC: Y644M (1) BAT644M (1)	1-11/16"
			NEST	-----	-----	-----	-----	-----	B29D(2) A29D(2)	U29D-1 (2)	U29D-1 (2)	U29D-1 (2)	C29D (1)	-----		
			INDENTOR						Y34PR	Y34PR	Y34PR	Y34PR	Y48PR			
YGA34-2N	BROWN	20	BROWN DIE SET	-----	-----	-----	W34RT (4) W34VT (4)	W34VT (4)	-----	U34RT (4) U31ART (4)	U34RT (4) P34RT (4) U31ART (4)	U34RT (4) U31ART (4)	C34R (2) C31AR (2)	L34RT (2)	HYDRAULIC: Y644M (1) BAT644M (1)	2-5/16"
		299	NEST	-----	-----	-----	-----	-----	B34D(2) A34D(2)	U34D-1 (2)	U34D-1 (2)	U34D-1 (2)	C34D (2)	-----		
			INDENTOR						Y34PR	Y34PR	Y34PR	Y34PR	Y48PR			

SEE SHEET #1 FOR NOTES

REV.	DATE	DESCRIPTION	BY	C'K'D.
0	1/17/97	ADDED SHEET NO. 2 DATA TABLE (PER PCN 2887)	PL	JLM

HYLUG™, COPPER GROUND

CAT NO: YGA-2N (SEE TABLE) — SCALE NA

DRAWN: P LAPONIUS	1/20/97	CHECKED: J MICHAUD	1/21/97
DSGN APPVL: K MELLO	5/10/96	MFG APPVL: N/A	.
Q.A. APPVL: J. BRODEUR	9/27/96	MKTG APPVL: T NELSON	9/24/96
CAD FILE: SD82469-SHT02		PM REF: N/A	
		MDL REF: N/A	
		PROJECT: .	

FRAMATOME CONNECTORS USA INC.
BURNDY ELECTRICAL
FCI
MANCHESTER, NH 03108
U. S. A.
1-800-346-4175

DRAWING NO. SD82469 — REV 0

SHEET 2 OF 2

REV. 061995